Saipa Wheel Manufacturing Company	**Limited Tender Form**	**Tender No: 051200** **Tender Date: 25/11/2026**

Seller Information:
Company :
Address:
Zip Code:
Phone Number:
Email Address:

No	Description	Specifications	Unit	QTY	Unit Price	Total(RMB/USD/€)
1	Steel Wheel Disk Tools & Mold	See attached RFQ	Set	1		
Total(RMB/USD/€)						
Discounts(RMB/USD/€)						
Payable Amount(RMB/USD/€)						

Delivery Place: Khorramshahr- IRAN

Delivery Time:

Terms of Payment:

Tender Opening: November 25 2026

Deadline: December 01 2026

Purchase Order: **Purchase Invoice** ☑ **Purchase Contract** ☐

Signature:

Saipa Wheel Manufacturing Company is entitled to accept or reject the received quotes.

Request for Quotation

RFQ: **Steel Wheel Disk Tools & Mold**	Quotation Due By: **10/11/2026**	**Saipa Wheel Manufacturing Co**

Item Specifications:

See the attached drawings as below:

1. **2D drawing of Peugeot 207 Wheel.**
2. **3D drawings of the product before and after the Stage 7 manufacturing process (7th OP)**, including 14 air holes and 4 bolt holes.
3. **Drawings of the Stage 7 die shoes** used in Rio and Peugeot 405 products, provided as reference samples.

Buyer Information:

- **Address:** Tiba Industrial Complex, 18th Km of Fath Expressway, Saipa Wheel Manufacturing Co, Tehran, Iran. Zip Code:1387113851
- **Tel:**+982146079513/+982146079516 Ext. 614/610
- **Website:** www.kswco.com
- **Email**:commercial2.kswco.com
- **Contact Person:**Davood Zangeneh +989123162409

Terms & Conditions:

- **Delivery Location:** Khorramshahr/Tehran-Iran
- **Quantity:**1 set
- **Delivery Date:**
- **Warranty/Guarantee:**
- **Quotation Validity Date:**
- **Payment Terms:**

Request for Quotation

PREPARATION OF QUOTATIONS:

- Offerors are expected to examine the specifications, drawings, schedule, and all instructions. Failure to do so will be at the Offeror's risk.
- Each Offeror shall furnish the information required by this RFQ. The Offeror shall sign its Quotation and print or type its Name, Firm, Address, Telephone and Fax Numbers, Email Address and Date. The individual signing the Quotation must be an authorized agent of the Offeror.
- The Offeror is to quote all transportation charges prepaid and add. Quotations must be firm.
- Any explanation desired by an Offeror regarding the meaning or interpretation of the RFQ, drawings, specifications, etc., must be requested in writing at least seven (7) calendar days prior to the Quotation Due Date. Please submit all questions to the RFQ Administrator via email. KSWCO will provide a written response to all prospective Offerors if such information is necessary to Offerors in submitting Quotations on the RFQ.
- To receive consideration, Offeror must provide one electronic Quotation. All price quotations must be made directly in the provided document.
- Samples of items, when required, must be submitted within the time specified, and unless otherwise specified at no expense.
- Offers and modifications of Quotations received via email by the RFQ Administrator after the Quotation Due Date will not be considered.
- A contract or purchase order will be awarded to that responsible Offeror whose Quotation conforming to the RFQ will be most advantageous to KSWCO. Price, quality, delivery, Offeror's past performance and other factors may be considered in the award of a contract or purchase order. KSWCO may investigate and/or require additional information to fully evaluate an Offeror and its response to this RFQ.
- KSWCO reserves the right to reject any or all Quotations and, unless otherwise specified by the Offeror, KSWCO reserves the right to add and/or delete any or all of the requested items.
- Quotations with the attributes below are encouraged:
  - Decrease waste or minimize energy demands
  - Make use of post-consumer content
  - Are recyclable/products with an end-of-life plan
  - Are more easily repaired or updated (to avoid planned obsolescence)
  - Come from more local sources or are domestically produced
  - Use processes that do the least harm to the environment

Should you require any further information, please do not hesitate to contact us.

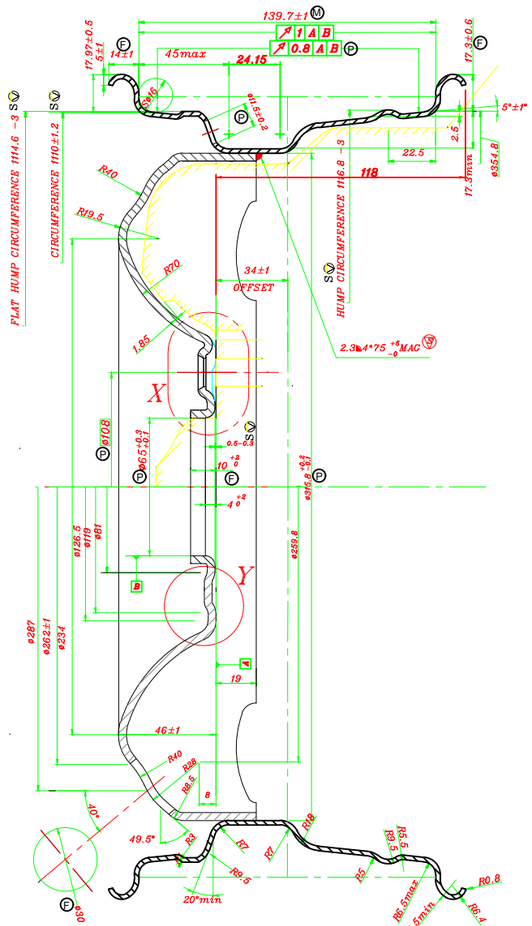

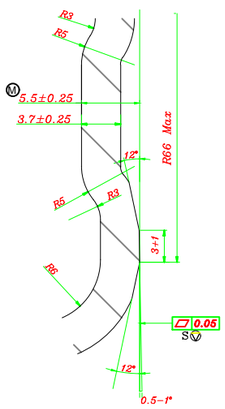

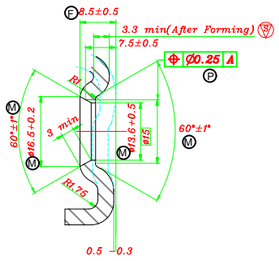

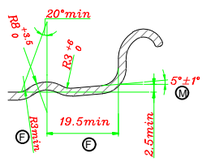

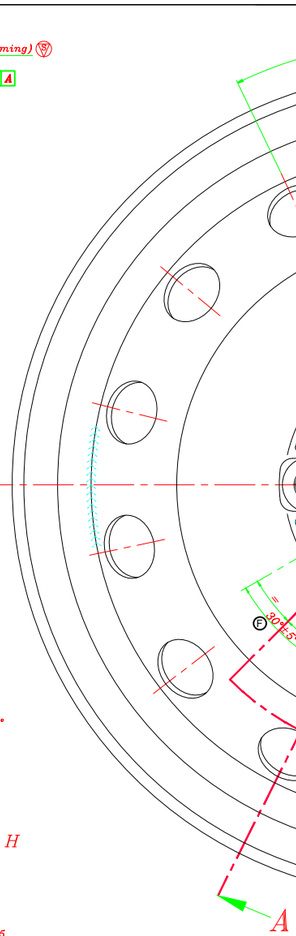

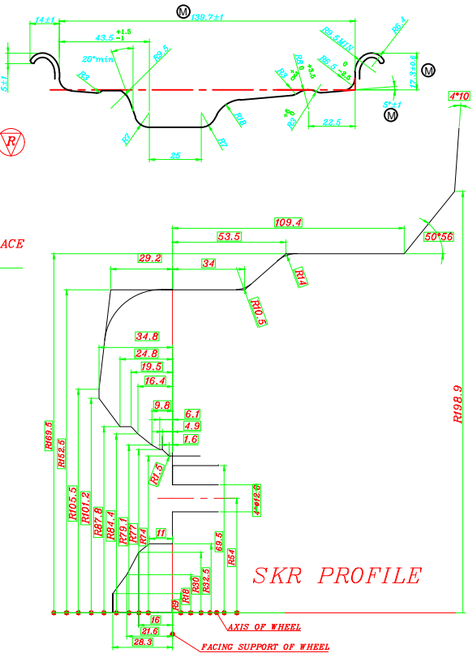

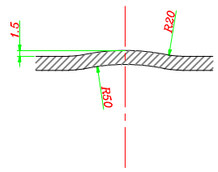

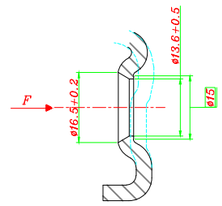

F=3000 DAN FOR DEFLECTION<=0.5 mm

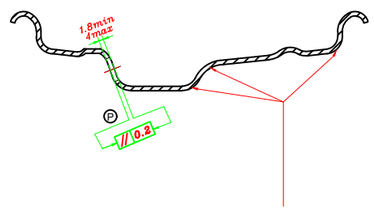

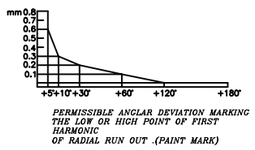



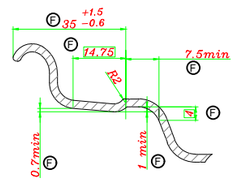

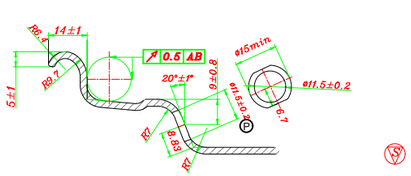

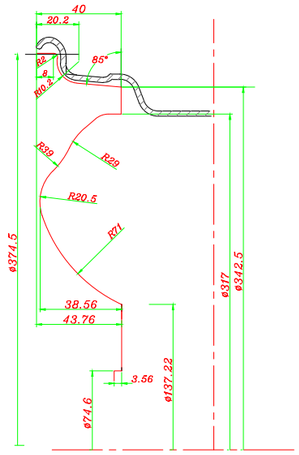

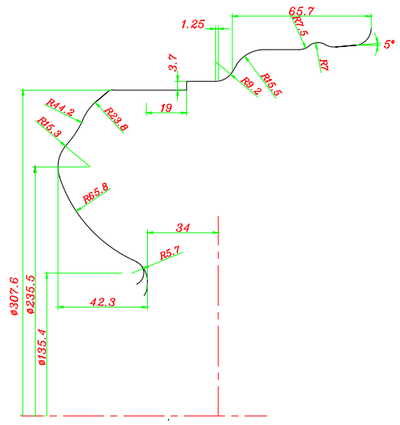

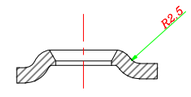

*. Geometry of Rim Profile

PAINT: ED (Electro Desposition) Black- TYPE A
PAINT THICKNESS: 15µm~20µm(STE9629346199)
RESISTANCE To SALT SPRAY:500 h-ACC.: B15 5260
CROSS HATCH ACCORDING TO : B15 5260
RESISTANCE TO WATER ACCORDING TO: B15 5260
STATIC UNBALANCE MAX : 0.450 Kg.Cm
WELD STRENGHT:30 TON Min according to JASO C614-87
No leakage after 5 minuts in Min 4.5 bar
Wheel weight : 7 ± 0.25 Kg
Rim&disc weld : 4 Arc Weld Length Min75mm
Thickness of disc in critical areas: Min 3.1mm
Thickness of Rim in critical areas: Min 1.7mm
Absence of burrs in Valve Hole

TEST SPECIFICATION

CORNERING FATIGUE TEST
$M_{b\,Max}$ = 2401 N.m
$M_{b\,fat}$ = 1.8 KN.m cycle 60.000
$M_{b\,ult}$ = 1.2 KN.m cycle 600.000

RADIAL FATIGUE TEST
(STRAIGHT, WITHOUT CAMBER OR SLIP ANGLE)
TEST LOAD : 1050 Kgf.
DISTANCE OF TEST : 2000 Km MIN.
SPEED OF TEST : 70~100 Km/h
TIRE DIMENTION: 185/65 R14
TIRE ROLLING RADIUS: 286 mm
BOLT TIGHTENING TORQUE: 90N.m ±10%

Mark on wheel:
6905764815 MWM-51/2Jx14CH-34
NORM PSA : B15 5260 & R15 3102

Description	DISK	RIM
Thickness before forming	3.7±0.15	2.1±0.15
MATERIAL	SAPH 440	SAPH 440
Mechanica Properties: Tensile Strengt	440 N/mm	440 N/mm
Yield Strength	350 N/mm	350 N/mm
Elongation	33% min	30% min
STANDARD	JIS G3113-90	

SAFETYN R15 3102
REGULATION TSIRI 2401
Q REF.: 440 Kg
IKCO. NO.: YC20298204(OR)

REV.	DESCRIPTION	BY	DATE	BY	DATE
0	APPROVED FOR FABRICATE				
		REV. CHECKED		REV. APPROVED	

PLANT CODE : ... FACILITY CODE : ... ID. CODE : ...
SCALE: ... SIZE: A0

	DATE	NAME
DESIGNED		
DRAWN		
CHECKED	2025/4/16	CHERAGHPOOR
APPROVED	2025/4/16	RAFIEE
ANG.PROJ.		

SAIPA WHEEL MFG.CO
TITLE: WHEEL 5.5J14CH108ET34-4PE
REF. DWG. NO. :
DRAWING NO. : W5.5J14-05
SHEET 0 OF 0
REV. 1

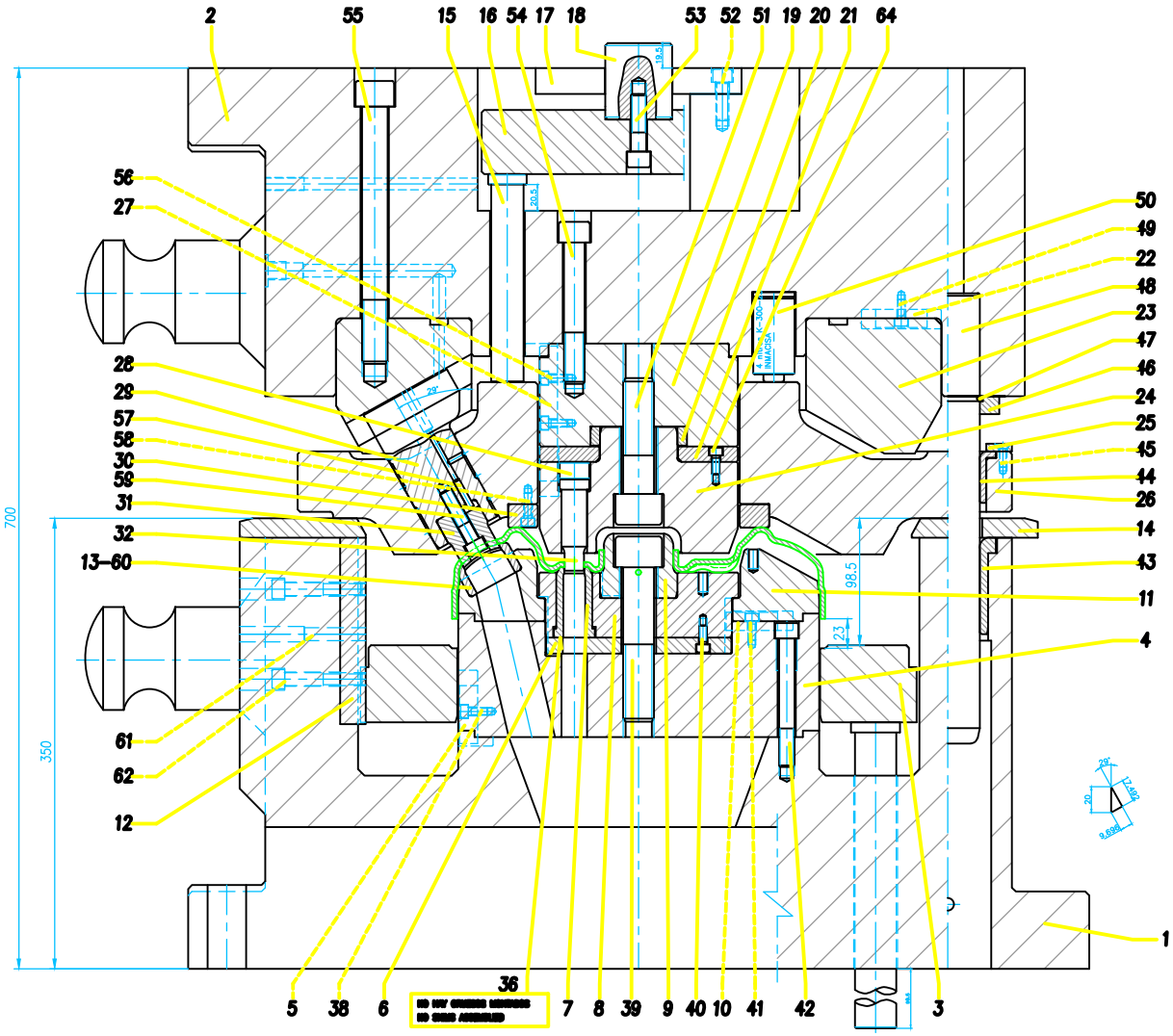

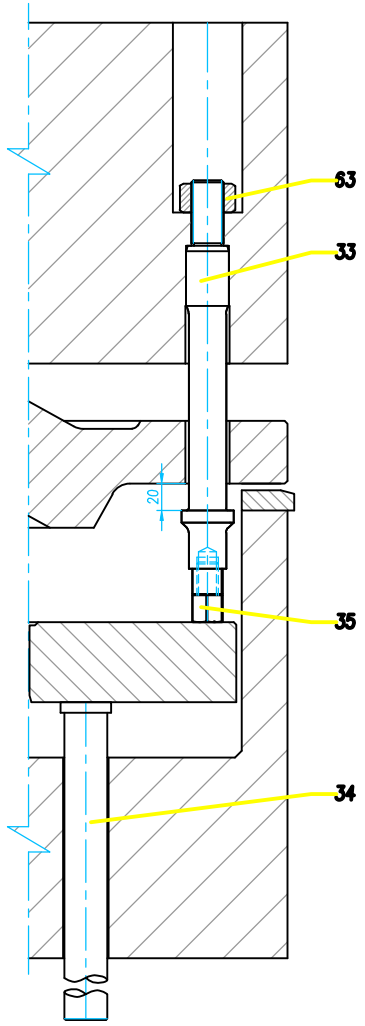

2	Tornillo Allen M6x16	64	8.8		DIN 6912
4	Tuerca seguridad M24	63			DIN 985
16	Tornillo Allen M10x60	62	8.8		ISO 4762
8	Pasador cilíndrico con rosca int.	61	ø10m6x40		DIN 7979
24	Tornillo Allen cabota baja M8x15	60	8.8		DIN 7984
12	Tornillo Allen M10x45	59	8.8		ISO 4762
4	Tornillo Allen M6x20	58	8.8		ISO 4762
12	Pasador cilíndrico con rosca int.	57	ø5m6x25		DIN 7979
2	Tornillo Allen M6x16	56	8.8		ISO 4762
6	Tornillo Allen M20x200	55	8.8		ISO 4762
4	Tornillo Allen M16x110	54	8.8		ISO 4762
1	Tornillo Allen M12x45	53	8.8		ISO 4762
4	Tornillo Allen M10x30	52	8.8		ISO 4762
1	Tornillo Allen M24x90	51	8.8		ISO 4762
4	Cilindro de gas	50	K-300-25		INMACISA
1	Tornillo Allen M6x16	49	8.8		ISO 4762
4	Columnas guia ø50x350	48		Modelo L	INMACISA
4	Anillo retención ø50	47		Modelo AR	INMACISA
4	Bridas retención ø50	46		Modelo BR	INMACISA
8	Tornillo c/exagono interior M6x16	45	8.8		DIN 7991
4	Casquillo bronce con grafito ø50 L=40mm	44		Modelo BGV	INMACISA
4	Casquillo bronce con grafito ø50	43		Modelo BGVT	INMACISA
4	Tornillo Allen M12x100	42	8.8		ISO 4762
1	Tornillo Allen M6x16	41	8.8		ISO 4762
2	Tornillo Allen M6x16	40	8.8		ISO 4762
1	Tornillo Allen M24x120	39	8.8		ISO 4762
1	Tornillo Allen M6x16	38	8.8		ISO 4762
1	Placa identificación	37	Chapa 2 mm aluminio		
4+4+4	Grueso	36	Tala templada		
4	Suplemento barra	35	F-154 Cementado		
4	Espiga extractora	34	1.7220 (F-125 T.T)		
4	Barra arrancador	33	F-154 Cementado		
4	Punzón	32	1.2379 Templado		
12	Punzón	31	1.2379 Templado		
1	Anillo arrancador	30	1.2510 Templado		
12	Patín	29	F-154 Cementado		
4	Sufridera	28	1.2510 Templado		
1	Antigiro	27	1.2510 Templado		
1	Guiapatines	26	1.2738 + Nitrocarburado 0.5mm		
4	Brida	25	1.0503 (ST-52)		
1	Portapunzones	24	1.2510 Templado		
1	Anillo portapatines	23	1.2311 + Nitrocarburado 0.5mm		
1	Antigiro	22	1.2510 Templado		
1	Sufridera	21	1.2510 Templado		
1	Anillo centraje	20	1.2510 Templado		
1	Suplemento	19	1.7220 (F-125 T.T)		
1	Tope	18	1.0503 (ST-52)		
1	Pletina	17	1.0503 (ST-52)		
1	Estrella	16	1.0503 (ST-52)		
4	Espiga extractora	15	1.7220 (F-125 T.T)		
1	Placa	14	1.7220 (F-125 T.T)		
12	Matriz	13	1.2379 Templado		
4	Patín	12	1.2510 Templado		
1	Portamatrices	11	PK1 117		
1	Antigiro	10	1.2510 Templado		
1	Centrador	9	1.2510 Templado		
1	Portamatriz	8	1.2510 Templado		
4	Matriz	7	1.2379 Templado		
1	Sufridera	6	1.2510 Templado		
1	Antigiro	5	1.2510 Templado		
1	Suplemento	4	1.7220 T.T. (F-125)		
1	Elevador	3	1.7220 T.T. (F-125)		
1	Base superior	2	Fundición GG50		
1	Base inferior	1	Fundición GG50		
Cant.	Designacion	DIN	Ref.	Material	Modelo nº / Norma nº

MATRIBAGES S.L.
Matrices i Utillages
Manresa (Barcelona)

Tolerancias generales según DIN ISO 2768-m

	Fecha	Nombre
Dibujado:	07-04-09	G.SUAREZ
Comprobado:		

Plano realizado con AutoCAD

OP_50 Punzonar 12 ventanas y agros. sujeción
Disco W5J13-03

22D460000

Cliente:	SAIPA WHEEL MFG.CO	Escala:	1:2
Ref:	KIA RIO (13")	Hoja:	1 de 2

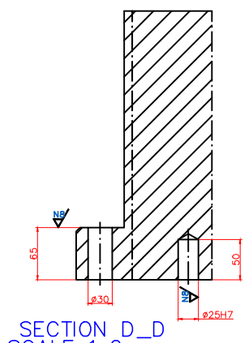

SECTION D_D
SCALE 1:2

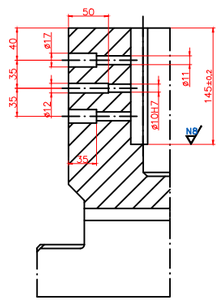

SECTION B_B
SCALE 1:2

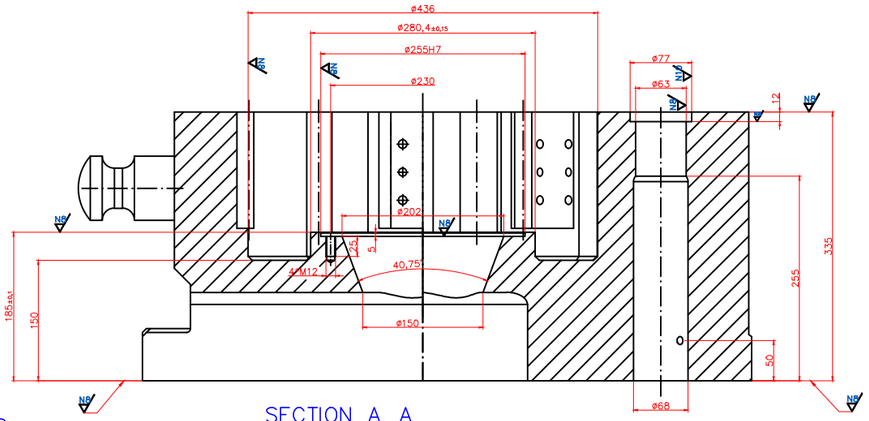

SECTION A_A
SCALE 1:2

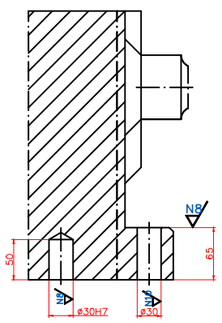

SECTION E_E
SCALE 1:2

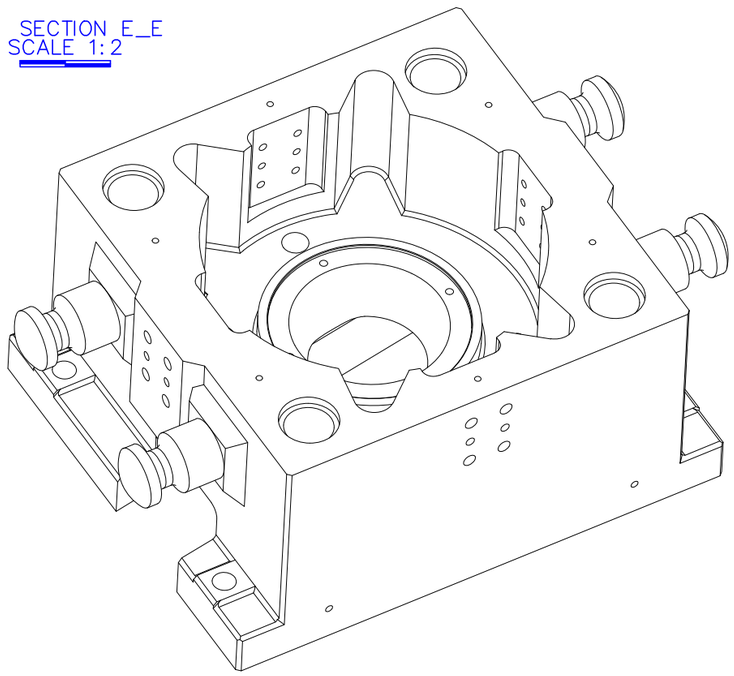

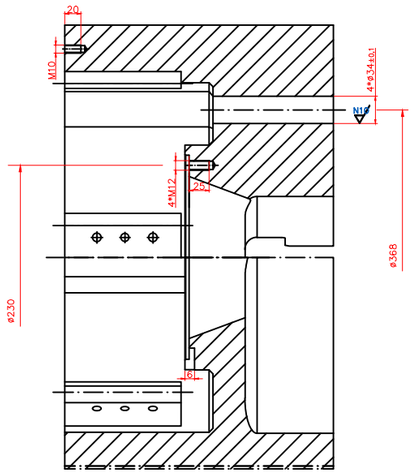

SECTION C_C
SCALE 1:2

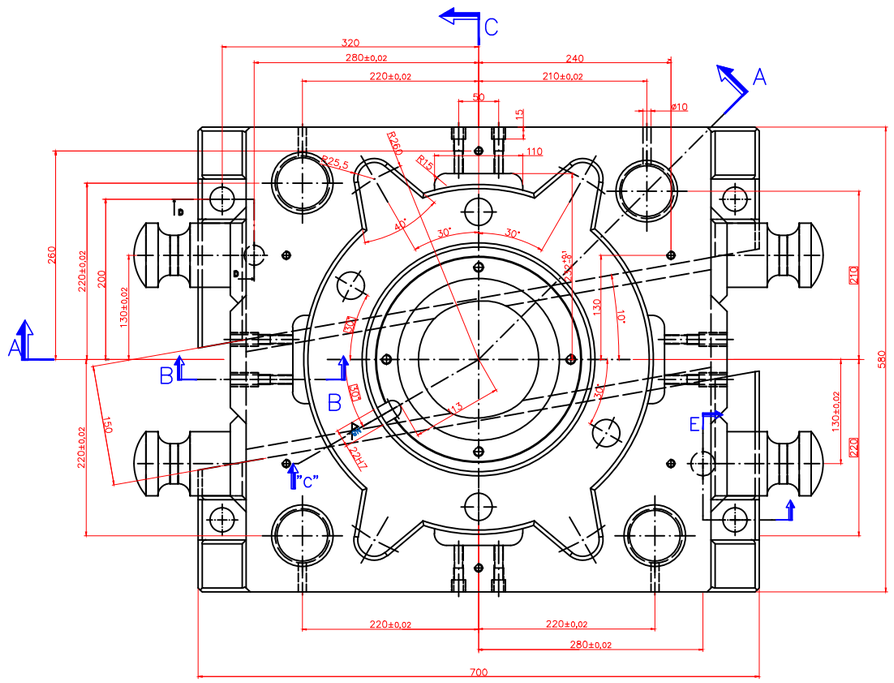

DIMENSION	TOLERANCE/µm	1	–.	–	–	–	GGG50	–	–
0000	±00	PART. no.	PARTS NAME	QTY	DIMENSION	MAT.no	MATERIAL	REF. MATERIAL	HARDNESS

	NAME	DATE
APPROVED BY	K–AHOONBAR	–
CONFIRMED BY		–
CHECKED BY	M.SHARHANI	–
DRAWED BY	M.MAZRAEH	–
DESIGNER BY		–

SAIPA WHEEL MFG.CO

TITLE:
FOR TIBA
PO: 06

UNSPECIFIED TOLERANCE TO BE ACCORDING TO DIN 7168 CLACE (f) FOR
CHAMFER FOR MECHANISM(R)

ANG.PROJ.

SIZE:	–	REFRENCE	DRAWING NO.
SCALE:	F.T.P	SAI–005–05–001	22D460001

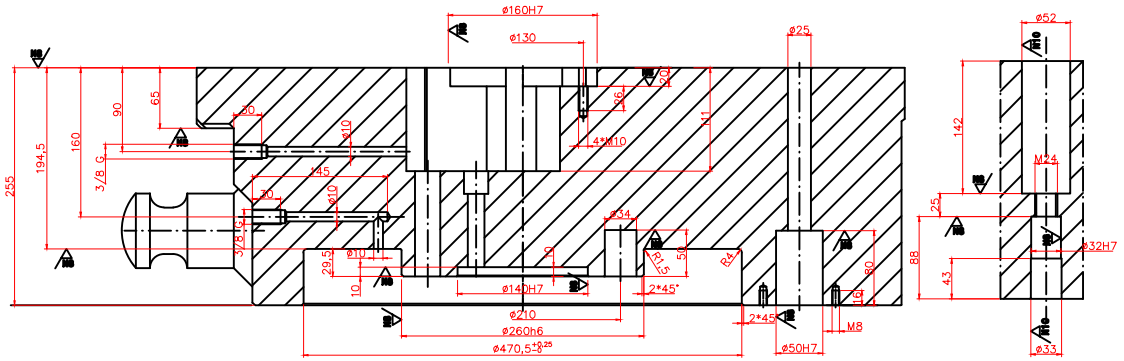

SECTION A_A
SCALE 1:2

VIEW "C"
SCALE 1:2

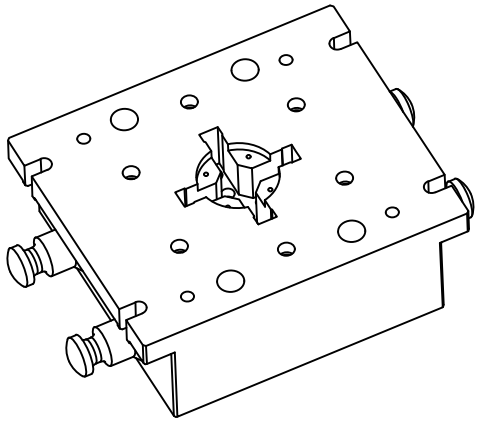

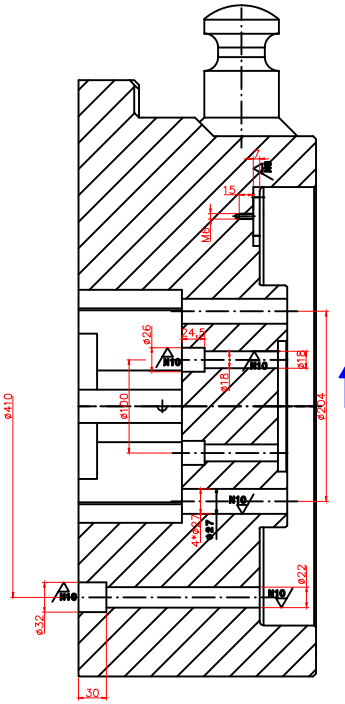

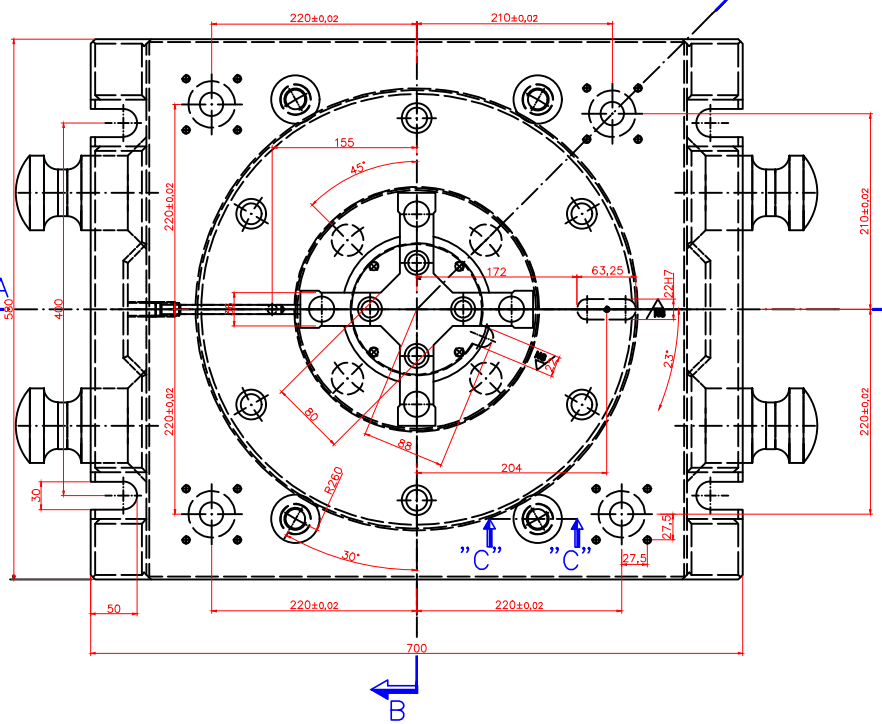

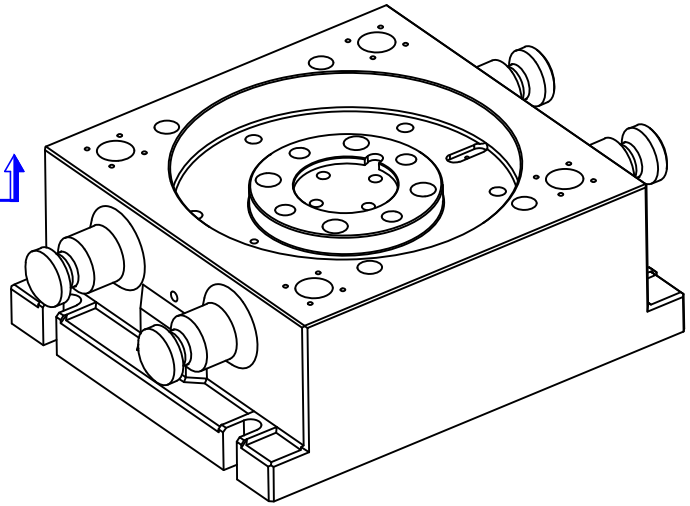

SECTION B_B
SCALE 1:2

DIMENSION	TOLERANCE/mm	1	–.	–	–	–	GGG50	–	–
0000	±00 −00	PART. no.	PARTS NAME	QTY	DIMENSION		MAT.no	MATERIAL	REF. MATERIAL	HARDNESS

	NAME	DATE
APPROVED BY	K–AHOONBAR	–
CONFIRMED BY		–
CHECKED BY	M.SHARHANI	–
DRAWED BY	M.MAZRAEH	–
DESIGNER BY		–

SAIPA WHEEL MFG.CO

TITLE:
FOR TIBA
PO: 06

UNSPECIFIED TOLERANCE TO BE ACCORDING TO DIN 7168 CLACE (f) FOR CHAMFER FOR MECHANISM(R)

ANG.PROJ.

SIZE:	–	REFRENCE	DRAWING NO.
SCALE:	F.T.P	SAI–005–05–002	22D460002

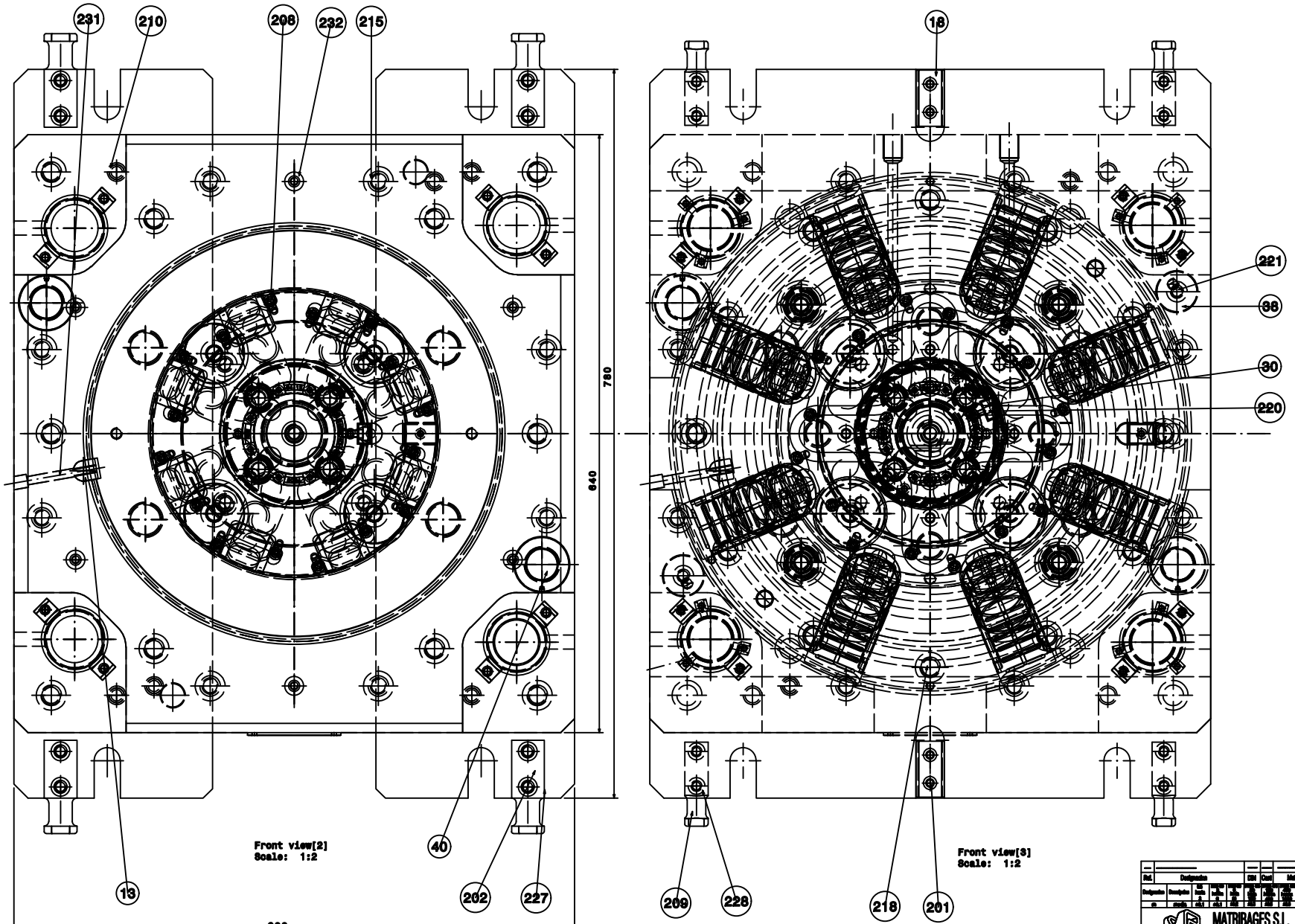

MATRIBAGES S.L.

FRONT VIEWS

PUNCHING THE WINDOWS AND SETTING HOLES

SAI-001-05-000

Scale 1:2

Sheet 3/8

Section view A-A
Scale: 1:2

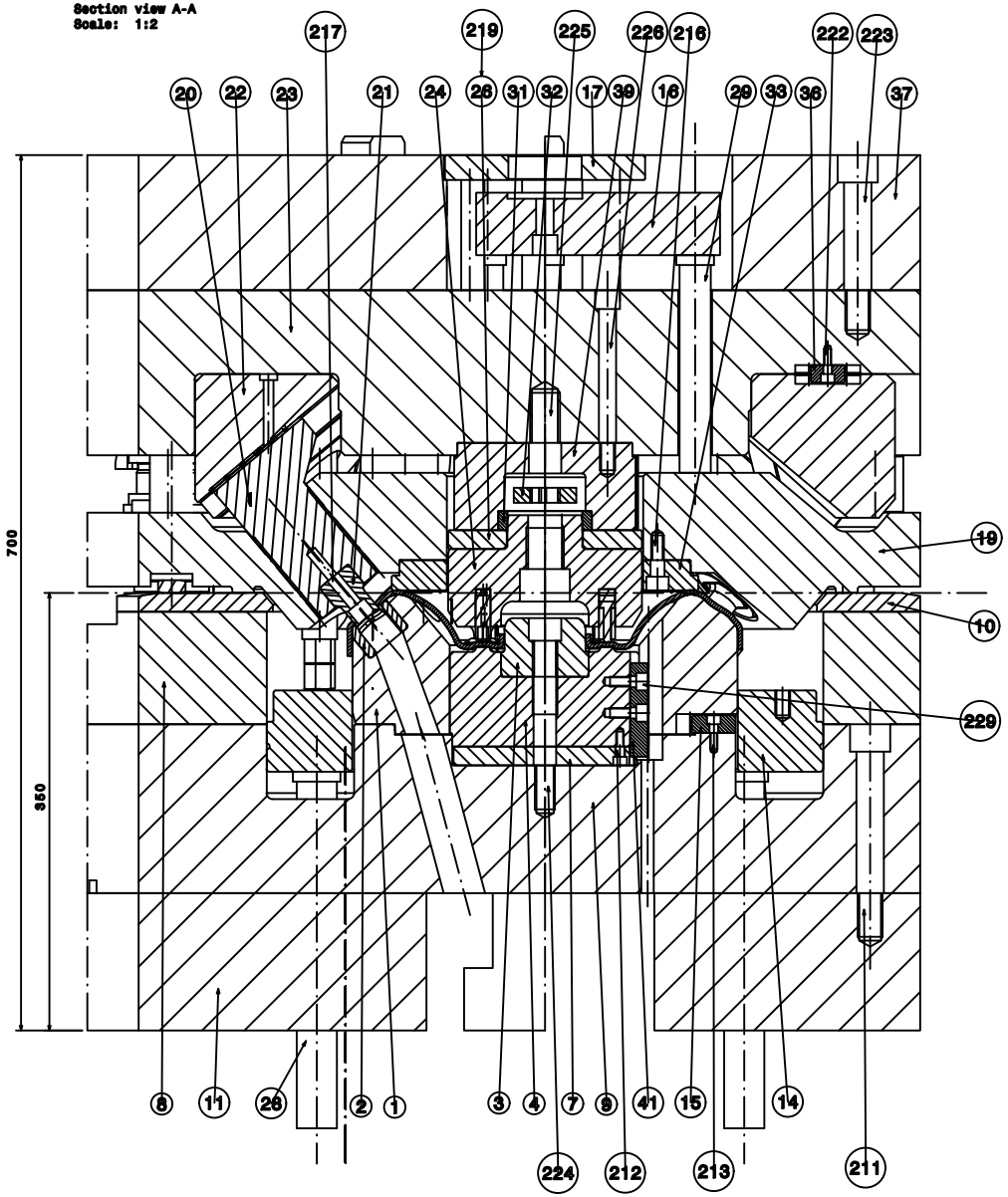

Front view
Scale: 1:4

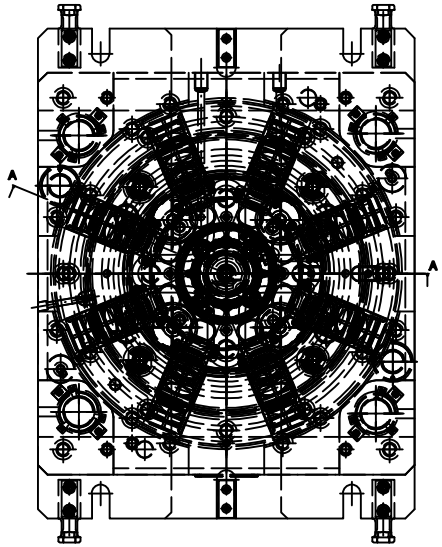

Ref.	Designation	QTY	Cant.	Material	Modification	Modification	Name
300	NUT	000	6		M24		
299	SCREW	012	9		M10x55		
298	SCREW	012	2		M8x70		
297	SCREW	012	9		M8x30		
296	SCREW	012	2		M8x30		
295	SCREW	012	9		M10x55		
294	SCREW	012	9		M10x45		
293	SCREW	012	4		M12x120		
292	SCREW	012	1		M20x120		
291	SCREW	012	1		M16x120		
290	SCREW	012	9		M20x120		
289	SCREW	012	1		M8x16		
288	SCREW	012	2		M12x40		
287	SCREW	012	1		M8x35		
286	SCREW	012	2		M8x16		
285	SCREW	012	9		M20x100		
284	SCREW	012	9		M10x30		
283	SCREW	012	4		M10x55		
282	SCREW	012	9		M20x100		
281	SCREW	012	4		M12x100		
280	SCREW	012	1		M8x16		
279	SCREW	012	2		M8x16		
278	SCREW	012	10		M20x140		
277	PIN	7079	9		#12x50		
276	LIFTER-STUDS		4	210.11.025	FERO		
275	SCREW	7004	10		M8x10		
274	ANGLE		12	207.45	FERO		
273	GUIDE PIN		4	2021.40.050.220.10	FERO		
272	ANGLE		10	2072.45.10	FERO		
271	BUSH		644	2002.70.050.	FERO		
270	LIFTER-STUDS		4	210.11.020	FERO		
269	SCREW	012	4		M8x40		
268	SCREW	012	4		M10x30		
1	ANGELA		8	1.2365	45x5		
1	ESPIRA		4	1.2365	45x145		
	PUNCH		29	1.2379 HRc 60±1	13.0x35x30		
	COVER		9+1	1.2379 HRc 60±1	45x135		
	FLAKE		9+1	1.2379 HRc 60±1	13.0x35x5		
	PUNCHBOX		9+1	1.4028	45x135x35		
41	COTTER PIN		1	1.2842 HRc 60±1	22x140x15		
40	STOP		2	1.4028	50x100x30		
39	FLAKE		1	1.2365	45x135x10		
38	STOP		2	1.4028	45x50		
37	UPPER FLAKE		1	1.4028	150x135x5mm		
36	COTTER PIN		1	1.2842 HRc 60±1	22x70x14		
35	STOP		4	1.4028 CRN 60±1 1.5mm	45x50		
34	LIFTER PILLAR		4	1.4028 CRN 60±1 1.5mm	45x250		
33	ESCAPE PATE		1	1.2842 HRc 60±1	45x50x5		
32	ESCAPE ELEMENT		1	1.4028	45x50		
31	RING		1	1.2842 HRc 60±1	45x145		
30	COTTER PIN		1	1.2842 HRc 60±1	22x140x30		
29	PILLAR		4	1.7225 Tem/HRc 60±1	45x50x74		
28	PILLAR		4	1.7225 Tem/HRc 60±1	45x50x55		
27	FLAKE		4	1.2842 HRc 60±1	45x50		
26	FLAKE		1	1.2842 HRc 60±1	45x50x5		
25	PUNCH		4	1.2842 HRc 60±1	45x50		
24	PUNCH-SUPORT		1	1.2842 HRc 60±1	45x50x5		
23	FLAKE		1	1.4028	50x50x50x22		
22	PUNCH-SUPORT GUIDE		1	1.2365 CRN 60±1 1.5mm	45x50x15		
21	PUNCH-WINDOWS		9	1.2842 HRc 60±1	45x50x35		
20	PUNCH-SUPORT		9	1.4028 CRN 60±1 1.5mm	50x50x105		
19	PUNCH-GUIDE		1	1.2738 carburizado	50x50x105		
18	GUIDE ELEMENT		2	1.4028	50x50x35		
17	FLAKE		1	1.4028	45x50x5		
16	FLAKE		1	1.4028	50x135mm		
15	COTTER PIN		1	1.2842 HRc 60±1	22x50x14		
14	LIFTER		1	1.4028	5mm 45x50x250x50		
13	COTTER PIN		1	1.2842 HRc 60±1	22x50x30		
12	LOWER FLAKE		2	1.4028	250x150x10		
11	TRANSFER FLAKE		1	1.2365	50x50x50x5		
9	FLAKE		1	1.4028	50x50x50x35		
8	FLAKE		1	1.4028	50x135mm		
7	FLAKE		1	1.2842 HRc 60±1	5*145x35		
6	FLAKE		4	1.2842 HRc 60±1	45x50		
5	CENTR.LAKUVE		4	1.2842 HRc 60±1	45x50		
4	CENTR.LAKUVE SUPORT		1	1.2842 HRc 60±1	5*145x50		
3	CENTER ELEMENT		1	1.2842 HRc 60±1	5*70x7		
2	MARK		9	1.2842 HRc 60±1	45x50x50		
1	MARK SUPORT		1	PKT-117	5*250x111,5		

Ref.	Designation	QTY	Cant.	Material	Modification	Modification	Name
1	TABLA-EFECTOS ELEMENT		4	Polietileno	450x1130		

NIVEL	Nº	MODIFICACIONES	NOMBRE	FECHA	APROBADO
V1	1	Añadidas refs. 40,50,294	G.SUAREZ	18-10-04	

MATRIBAGES S.L.
Matrices y Troqueles
Stamping Tooling

SECTION VIEWS
PUNCHING THE WINDOWS AND SETTING HOLES

SAI-001-05-000

	Name	Date
Drawn	ZI-Yi	G.SUAREZ
Checked	——	——
Approved	——	——

Drawing checked on: ——

Client: SAIPA WHEELS
Scale: 1:2
Sheet: 1/8
Q.T.: ——

Este dibujo es propiedad de Matribages S.L. queda prohibida su reproducción total o parcial sin previa autorización.

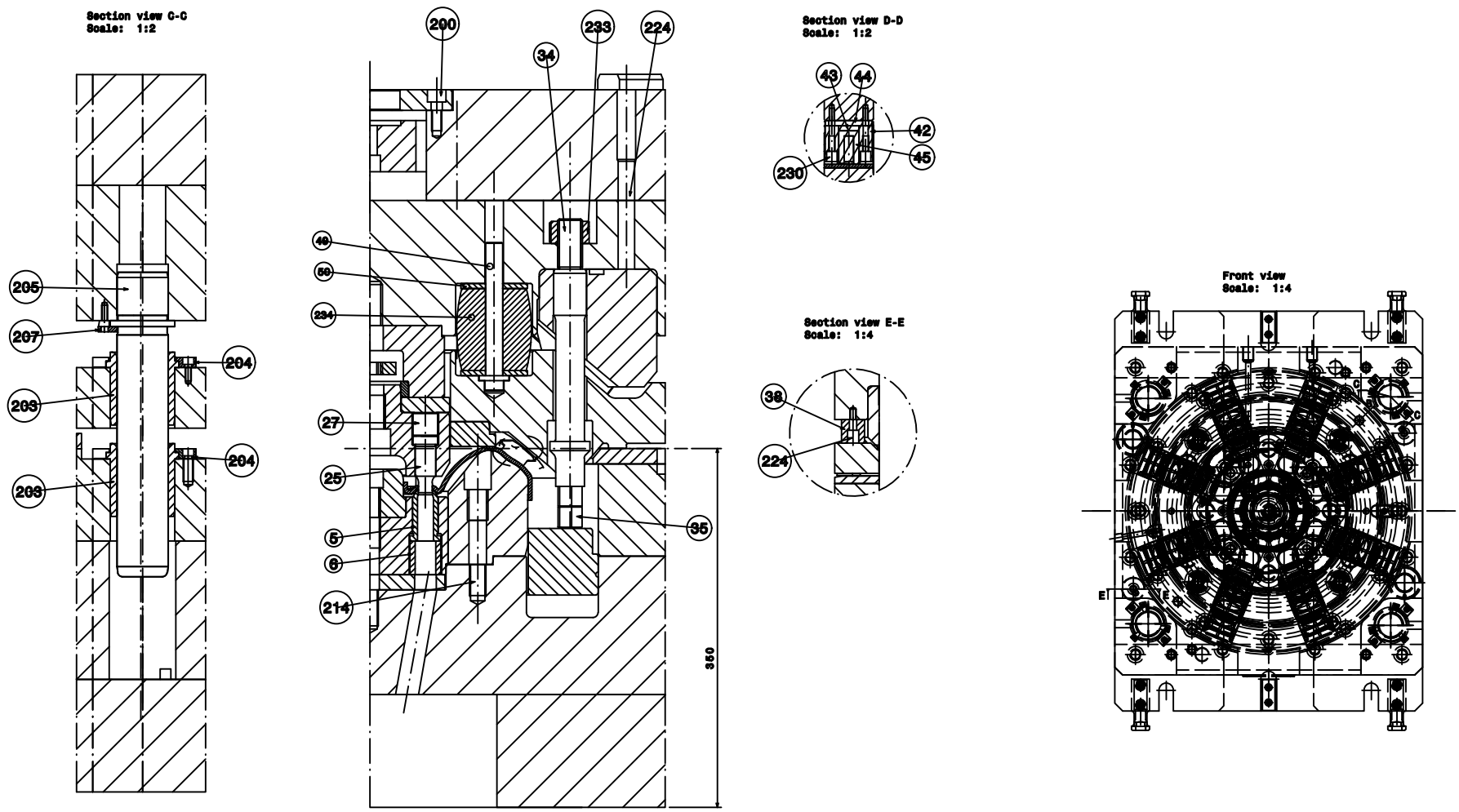

Ref.	Designation	DIN	Cant	Material	Medicine note	Medicine brute	Norma
Designation	Description						
m	media						

Tolerancias generales según UNE EN 22768 1:1000

MATRIBAGES S.L.
Matrices y Utillajes
Manufacturing

	Fecha	Nombre
Dibujado	27-7-04	G.SUAREZ
Comprobado	—	—
Aprobado	—	—

Dibujo efectuado con: —

SECTION VIEWS
PUNCHING THE WINDOWS AND SETTING HOLES

SAI-001-05-000

Cliente	SAPA WHEELS	Escala 1:2
Referencia	PEUGEOT 405	Hoja: 2/3

C.T.: —

Este dibujo es propiedad de Matribages SL, queda prohibida su reproducción total o parcial sin previa autorización.